talentum®
Specialist flame detection

Datasheet

Talentum®
Flame Detector UV/IR2
[EN] 16591-00, [FM] 16591-20



The Talentum® Flame Detector UV/IR2 is designed to protect areas where open fires may be expected and detects most flames from hydrocarbon fires with 4.3 µm emissions through to invisible fires such as hydrogen.

The UV/IR2 is sensitive to flickering, low frequency (1-15 Hz) infra-red radiation along with ultra-violet emitted by flames during combustion. It has a UV sensor and two IR sensors which respond to different wavelengths of both the ultra-violet and the infra-red spectrum. The signals from these sensors are processed by the detector and checked for characteristics of a flame. The simultaneous detection of both the UV and the IR light by the sensors will signal an alarm. False alarms from flickering sunlight, arc welding and lightning are eliminated by a combination of UV and dual IR signal processing techniques.

The UV/IR2 detector has selectable output options of relay contacts of 4 to 20 mA signal as standard.

FEATURES
Highest immunity to false sources
Solar blind
High ambient temperature applications
Suitable for indoor and outdoor areas
Unaffected by convection currents, draughts or wind
Proven response to multiple fuel types
Multi-spectrum detection
Selectable output options
Selectable response speed
Selectable sensitivity levels
Built in auto and manual test
Low current consumption
Fast response to fire

APPROVALS
Worldwide approvals include EN 54-10 certification. Visit **ffeuk.com** for up to date approvals information.

APPLICATIONS	
Aircraft hangars	Military and marine
Chemical plants	Nuclear power sites
Compressor stations	Petrochemical offshore/ onshore
Engine rooms	Pharmaceutical production
Fuel loading racks	Power plants
Generators	Refineries
High voltage equipment	Storage tanks
LNG/LPG production	Tunnels

ACCESSORIES	
07127-00	Adjustable Mounting Bracket
12545-00	Weather Shield [SS]
1800-101	Talentum Test Torch
12556-00	Air Purge Kit

SCAN THE QR CODE
TO EXPLORE THE TALENTUM
PRODUCT RANGE

Talentum®
Flame Detector UV/IR2
[EN] 16591-00, [FM] 16591-20

Datasheet

MECHANICAL SPECIFICATION	
Housing material	Die cast zinc alloy (ZA12)
Housing colour	Blue RAL 240 50 35
Dimensions	142(h) x 108(w) x 79(d) mm (5½"(h) x 4¼"(w) x 3⅛"(d))
Weight	1.75 kg (3.8 lb)
Cable gland entries	2 x 20 mm (2 x ¾")
Wiring	1.0 to 4.0 mm² (12 – 18 AWG)

ELECTRICAL SPECIFICATION	
Supply voltage	14 to 30 Vdc
Quiescent current	8 mA, RL2 energised 4 mA, current loop, RL2 off 3 mA, RL2 off
Alarm current	28 mA, RL1 & RL2 energised 20 mA, current loop, RL1 & 2 off 9 mA, RL1 energised
Power-up time	2 seconds max.
Self test voltage	14 to 30 Vdc
Relay outputs	Programmable operation including latching or non-latching
Relay maximum ratings	
Current	0.75 A
Voltage	48 Vdc
Power	30 W
(Note: resistive loads only)	
Refer to User Manual for further details	

ENVIRONMENTAL	
Operating temperature	EN: -10°C to +55°C (+14°F to +131°F) FM: -20°C to +60°C (-4°F to +140°F)
Storage temperature	-20°C to +65°C (-4°F to +149°F)
Relative humidity	95% non condensing
IP rating	IP65

PERFORMANCE	
Range	
High (Class 1)*	0.1 m² n-heptane at 25 m (82 ft)
Low (Class 3)	0.1 m² n-heptane at 12 m (39¼ ft)
(see EN 54-10 for sensitivity settings)	
Field of view	90° min. Cone
Spectral response	
UV	185 to 260 nm
IR	1.0 to 2.7 µm
* Has been tested and approved at Class I	

FUEL TYPE	DETECTION DISTANCE m (ft)
Diesel	25 (82)
Isopropanol	25 (82)
Jet Fuel A1	25 (82)
Jet Fuel JP8	35 (115)
Kerosene	25 (82)
Methylated Spirit	25 (82)†‡
N-Heptane	45 (148)†‡§
N-Hexane	35 (115)
Petrol	35 (115)

* All flame sizes 0.1m2 (144in2)

† Fuel type included within EN 54-10:2002+A1:2005 Class 1 certification testing at 25m (82 ft).

‡ Fuel type included within FM 3260 approval testing at 25m (82 ft).

§ The detection distance of 45 m (148 ft) is based on recorded and repeatable internal validation testing. Detection beyond 25 m (82 ft) is outside the scope of the EN 54-10 certification and FM 3260 approval.

FIELD OF VIEW

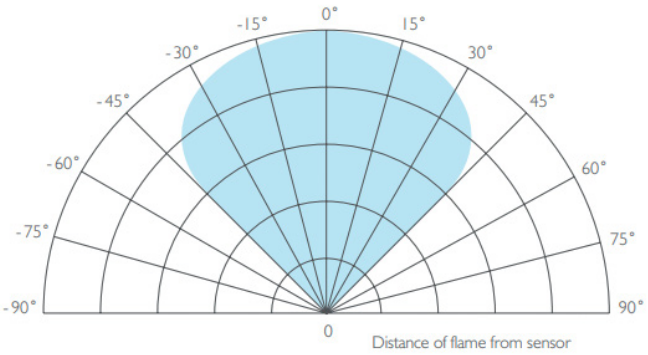

To meet the requirements of EN 54-10:2002 clause 5.4 (Directional Dependence), viewing angles must not exceed ±30°.

DIMENSIONS

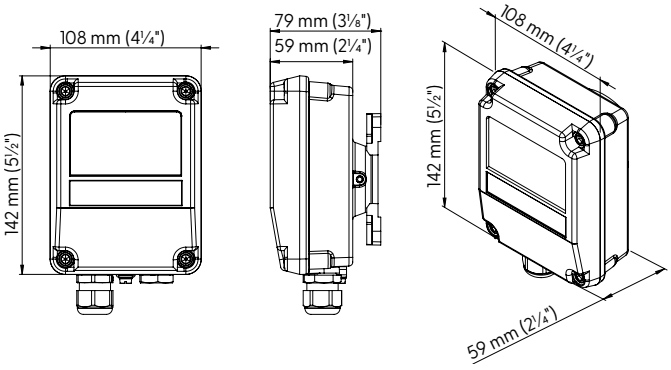

Please refer to our User Manual for mounting and wiring instructions. The installation of Talentum® flame detectors should be undertaken in accordance with recognised national or international standards and codes of practice.

FFE Limited, 9 Hunting Gate, Hitchin, Hertfordshire SG4 0TJ, UK
t: +44 (0) 1462 444 740 **w:** ffeuk.com

FFE Limited, 1455 Jamike Ave Ste 200, Erlanger, KY 41018-3147, USA
t: +1 859 957 1570 **w:** ffeuk.com

Specifications and wiring information are provided for information only and are believed to be accurate. FFE Ltd assumes no responsibility for their use. Data and design are subject to change without notice. Installation and wiring instructions are shipped with the products and should always be used for actual installation. For more information, contact your Sales Representative.

Document Part No: 24-0060-06