talentum®
Specialist flame detection

Datasheet

Talentum®
Flame Detector IR3 Ex d
[EN] 16519-00, [FM] 16519-20

The Talentum® Flame Detector IR3 Ex d is designed to protect hazardous areas where open fires may be expected and detects almost all flames, including hydrocarbon fires with 4.3 µm emissions through to invisible fires such as hydrogen.

The IR3 Flame Detector is sensitive to flickering, low frequency (1-15 Hz) infra-red radiation emitted by flames during combustion even if the lens is contaminated by a layer of oil, dust, water, vapour or ice.

This detector has three IR sensors which respond to different IR wavelengths in order to discriminate between flames and spurious sources of radiation. False alarms from flickering sunlight are avoided by a combination of filters and signal processing techniques.

The Talentum® IR3 detector has selectable output options of relay contacts or 4-20 mA signal, as standard.



FEATURES
Excellent immunity to false sources
Tolerant of fumes, vapours, dust and mist
Suitable for indoor and outdoor areas
Detects flames through glass
Unaffected by convection currents, draughts or wind
Proven response to multiple fuel types
Multi-spectrum detection
Selectable output options
Selectable response speed
Selectable sensitivity levels
Built in auto and manual test
Low current consumption
Fast response to fire

APPROVALS
Worldwide approvals include EN 54-10, LPCB, ATEX, and IECEx certification. Visit **ffeuk.com** for up-to-date approvals information.

APPLICATIONS	
Aircraft hangars	Nuclear power sites
Biomass storage & handling	Petrochemical offshore/ onshore
Chemical plants	Pharmaceutical production
Coal handling	Printing
Engine rooms	Refineries
Fuel loading racks	Spray booths
LNG/LPG production	Storage tanks
Military and marine	Waste recycling

ACCESSORIES	
07127-00	Adjustable Mounting Bracket
07279-00	Weather Shield (Ex d) [SS]
12555-00	Air Purge (Ex d)
1800-101	Talentum Test Torch

SCAN THE QR CODE
TO EXPLORE THE TALENTUM
PRODUCT RANGE

Talentum®
Flame Detector IR3 Ex d
[EN] 16519-00, [FM] 16519-20

Datasheet

MECHANICAL SPECIFICATION	
Housing material	Copper free aluminium alloy
Housing colour	Red
Dimensions	158(h) x 149(w) x 137(d) mm (6¼"(h) x 5⅞"(w) x 5⅜"(d))
Weight	2.3 kg (5 lb)
Cable gland entries	3 x 20 mm (3 x ¾")
Wiring	1.0 to 4.0 mm² (12 – 18 AWG)

ELECTRICAL SPECIFICATION	
Supply voltage	14 to 30 Vdc
Quiescent current	8 mA, RL2 energised 4 mA, current loop, RL2 off 3 mA, RL2 off
Alarm current	28 mA, RL1 & RL2 energised 20 mA, current loop, RL1 & 2 off 9 mA, RL1 energised
Power-up time	2 seconds max.
Self test voltage	14 to 30 Vdc
Relay outputs	Programmable operation including latching or non-latching
Relay maximum ratings	
Current	0.75 A
Voltage	48 Vdc
Power	30 W
(Note: resistive loads only)	
Refer to User Manual for further details	

ENVIRONMENTAL	
Operating temperature	EN: -10°C to +55°C (+14°F to +131°F) FM: -20°C to +60°C (-4°F to +140°F)
Storage temperature	-20°C to +65°C (-4°F to +149°F)
Relative humidity	95% non condensing
IP rating	IP66

PERFORMANCE	
Range	
High (Class 1)*	0.1 m² n-heptane at 25 m (82 ft)
Low (Class 3)	0.1 m² n-heptane at 12 m (39¼ ft)
	(see EN 54-10 for sensitivity settings)
Field of view	90° min. Cone
Operating wavelength	
IR	1.0 to 2.7 µm
* Has been tested and approved at Class I	

FUEL TYPE	DETECTION DISTANCE m (ft)
Diesel	25 (82)
Isopropanol	25 (82)
Jet Fuel A1	25 (82)
Jet Fuel JP8	25 (82)
Kerosene	25 (82)
Methylated Spirit	25 (82) †‡
N-Heptane	45 (148) †‡§
N-Hexane	35 (115)
Petrol	35 (115)

* All flame sizes 0.1m² (144in²)

† Fuel type included within EN 54-10:2002+A1:2005 Class 1 certification testing at 25m (82 ft).

‡ Fuel type included within FM 3260 approval testing at 25m (82 ft).

§ The detection distance of 45 m (148 ft) is based on recorded and repeatable internal validation testing. Detection beyond 25 m (82 ft) is outside the scope of the EN 54-10 certification and FM 3260 approval.

FIELD OF VIEW

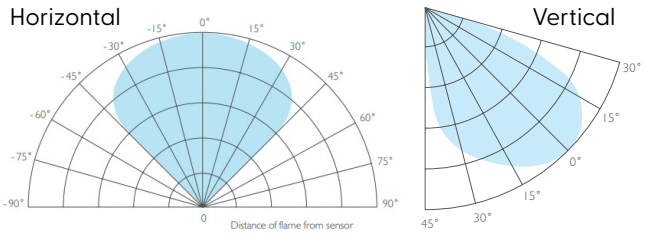

To meet the requirements of EN 54-10:2002 clause 5.4 (Directional Dependence), viewing angles must not exceed ±20°.

DIMENSIONS

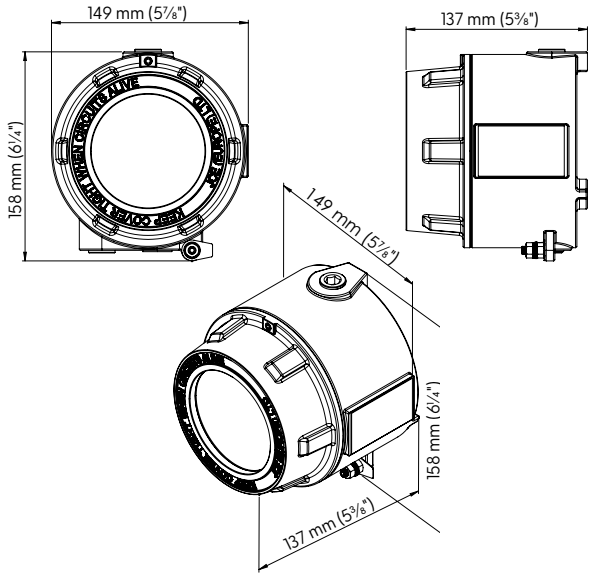

Please refer to our User Manual for mounting and wiring instructions. The installation of Talentum® flame detectors should be undertaken in accordance with recognised national or international standards and codes of practice.

FFE Limited, 9 Hunting Gate, Hitchin, Hertfordshire SG4 0TJ, UK
t: +44 (0) 1462 444 740 **w:** ffeuk.com

FFE Limited, 1455 Jamike Ave Ste 200, Erlanger, KY 41018-3147, USA
t: +1 859 957 1570 **w:** ffeuk.com

Specifications and wiring information are provided for information only and are believed to be accurate. FFE Ltd assumes no responsibility for their use. Data and design are subject to change without notice. Installation and wiring instructions are shipped with the products and should always be used for actual installation. For more information, contact your Sales Representative.

Document Part No: 24-0220-06