Angle Hose Valve

Model no. J281

- Size: 11/2" and 21/2"
- Female NPT x Female NH
- Working pressure : 300Psi



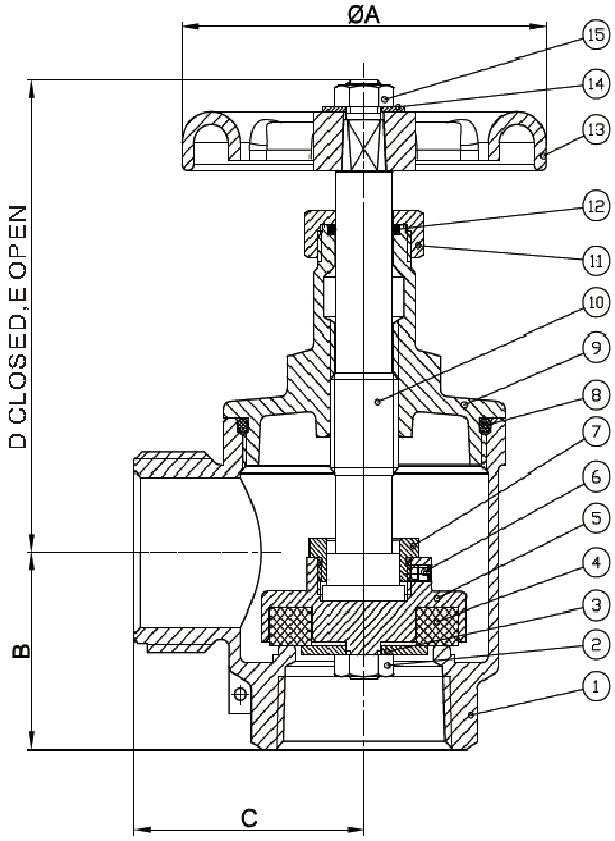

1.Dimension

Size	A	B	C	D	E
1 1/2"	100	50	63	119	145
2 1/2"	127	68	79	157	200

2.Material

NO	Part	Material	NO	Part	Material
1	Body	C37700	2	Nut	C37700
3	Washer	SS304	4	Gasket	EPDM
5	Disc Holder	C37700	6	Screw	SS304
7	Locknut	C37700	8	O-ring	EPDM
9	Bonnet	C37700	10	Stem	C37700
11	Compression Nut	C37700	12	O-ring	EPDM
13	Handwheel	Alu.	14	Handwheel Washer	SS304
15	Handwheel Nut	C37700			

CERTIFICATE OF COMPLIANCE

Certificate Number	20140110-EX16364
Report Reference	EX16364-20140108
Issue Date	2014-JANUARY-10
Issued to:	NINGBO HUACHENG VALVE CO LTD CHENGGUAN NINGHAI NINGBO, ZHEJIANG 315600 CHINA
This is to certify that representative samples of	HOSE VALVES Angle type, model J281
	Have been investigated by UL in accordance with the Standard(s) indicated on this Certificate.
Standard(s) for Safety:	UL 668, Standard for Hose Valves for Fire Protection Service; ULC/ORD C668, Guide for the Investigation of Hose Valves for Fire-Protection Service
Additional Information:	See the UL Online Certifications Directory at www.ul.com/database for additional information

Only those products bearing the UL Listing Mark for the US and Canada should be considered as being covered by UL's Listing and Follow-Up Service meeting the appropriate requirements for US and Canada.
The UL Listing Mark for the US and Canada generally includes: the UL in a circle symbol with “C” and “US” identifiers: c UL us the word “LISTED”; a control number (may be alphanumeric) assigned by UL; and the product category name (product identifier) as indicated in the appropriate UL Directory.

Look for the UL Listing Mark on the product.

William R. Carney

William R. Carney, Director, North American Certification Programs

UL LLC

Any information and documentation involving UL Mark services are provided on behalf of UL LLC (UL) or any authorized licensee of UL. For questions, please contact a local UL Customer Service Representative at www.ul.com/contactus

Certificate of Compliance

This certificate is issued for the following:

Angle Hose Valves

Model J281 in sizes 1-1/2 and 2-1/2 inch NPS

Prepared for:

Ningbo Huacheng Valve Co. Ltd.
Chengguan, Ninghai, Ningbo
Zhejiang 315600
China

Manufactured at:

Ningbo Huacheng Valve Co. Ltd.
Chengguan, Ninghai, Ningbo
Zhejiang 315600
China

FM Approvals Class: 1521

Approval Identification: 0003049539

Approval Granted: December 13, 2013

To verify the availability of the Approved product, please refer to www.approvalguide.com

Said Approval is subject to satisfactory field performance, continuing Surveillance Audits, and strict conformity to the constructions as shown in the Approval Guide, an online resource of FM Approvals.

Richard B. Dunne
Group Manager - Fire Protection
FM Approvals
1151 Boston-Providence Turnpike
Norwood, MA 02062

Member of the FM Global Group